RS Bilance®

TECHNOLOGY for Your Business

SAP.L plus

M 18 STAINLESS INDUSTRY 4.0

SAP.L plus

Automatic labeling machine with print and apply to air blast

Main features

- Cadences up to 120 ppm.
- Working temperature: from 0 °C to + 40 °C.
- Power supply: 230 Vac (Hz 50/60).
- Maximum power: 0,55 kW.
- Structure and carpentry in aluminum and stainless steel.
- Machine management by PLC.
- Print mode: thermal transfer and/or direct.
- Resolution: 8 dots/mm, 203 dpi (optional: 12 dots/mm, 300 dpi).
- Print speed: 203 dpi, 457 mm/s - 300 dpi, 300 mm/s.
- Label dimesions: from 40x40 to 100 mm x 110 mm.
- Print width: 104 mm.
- Internal diameter of the roll: 76 mm.
- Outer diameter of the roll: 300 mm.
- 600 meter ribbon capacity.
- Label application with compressed air (AIR BLAST), 6 bar 60 l/min, multi-label chamber with mechanical adjustment and position indicator.
- Mechanical handling of the vertical printing unit.

Software

- Machine management program.
- Program for printing and editing labels with image technology. Sw custom label.

Selectable functions

- External availability for data sharing.
- Multilingual selection.
- Multi-level password.
- Remote support.

PLU

- PLU number: 9999.
- All fields can be printed in bold, italic, underlined, single character, supporting different types (fonts, alignments, sizes, bold etc.) of character in the same text.

Label formats

- Customizable label formats (editable print format on the machine).
- Rotation of the label format: 0, 90, 180, 270.
- Rotation of the fields.
- Print in bold, italic, underlined, single font.
- It supports different fonts, not just per line.
- It supports and prints logos.
- Support of all barcodes.

I/O Section

- 1 USB 2.0.
- 1 Ethernet.
- 2 electrical signals (clean contacts).

Diagnostics

- Continuous monitoring of the status of the machine and of all integrated systems.

Options

- Resistive PC/Panel 12” display, suitable for use with gloves and in the presence of water/condensation.
- Print resolution: 300 dpi, speed 300 mm/s.
- 2D camera for presence of the label.
- 2D camera for reading QR Code.
- External PROFIBUS interface, Profibus protocol with PCB.
- Communication protocol ETHERCAT.
- Conveyor belts.

Layout

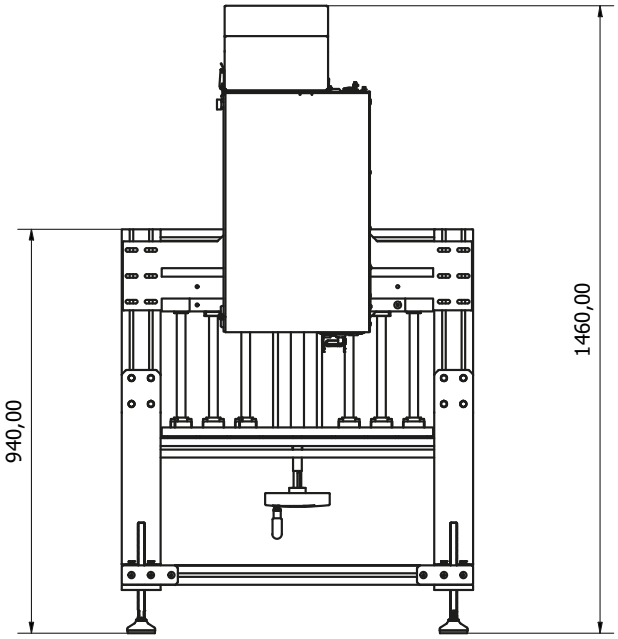

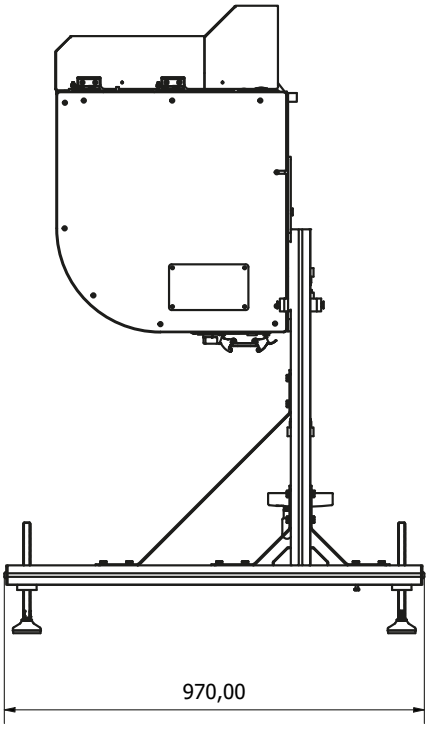

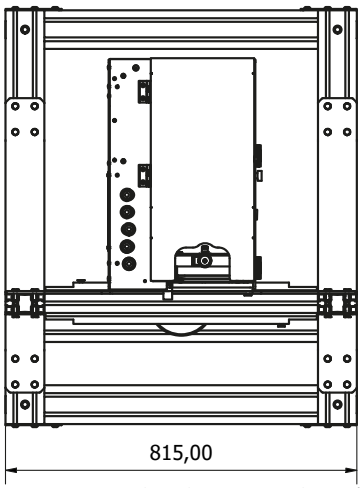

Technical specifications and images may be subject to improvements and modifications without notice.

SAP.L plus

MODULAR AND INTEGRABLE

REDUCED MAINTENANCE COSTS

SELF-DIAGNOSTIC

CONNECTIVITY AND DATA SHARING WITH OTHER SOFTWARE

REMOTE ASSISTANCE

RS Bilance®
TECHNOLOGY for Your Business
R.S. Bilance S.r.l.
Via Rinaudo, 19, Valcorrente - 95032 Belpasso CT
Tel. +39 095 3523283
commerciale@rsbilance.com
www.rsbilance.com