RS Bilance®

TECHNOLOGY for Your Business

TTP-2610MT

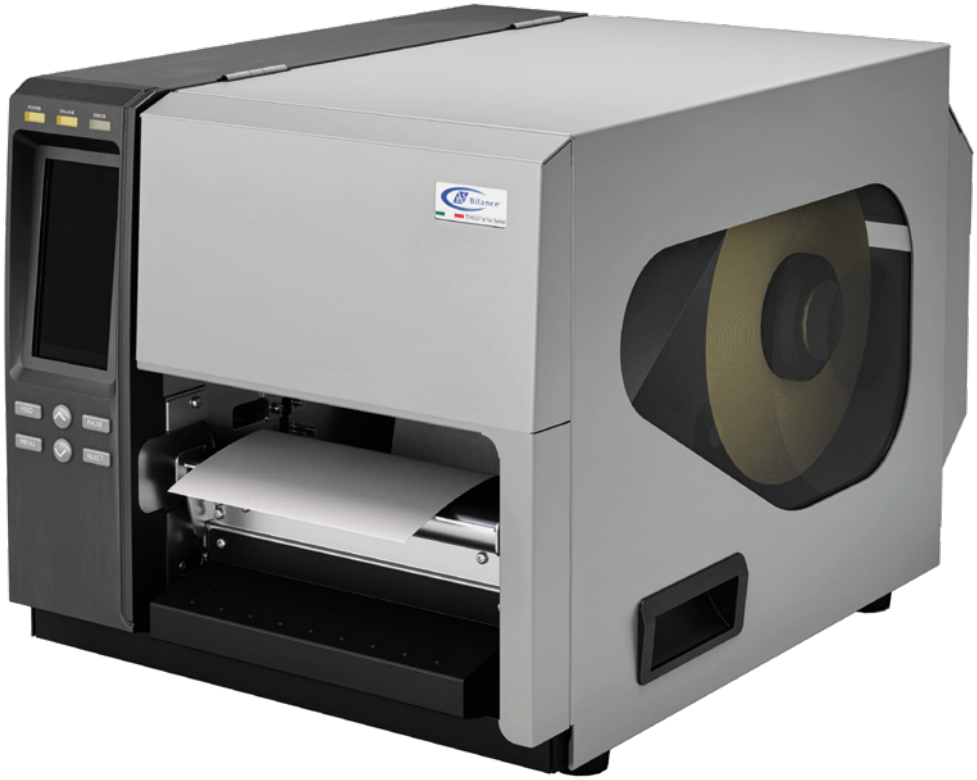

M 18 STAINLESS USB INDUSTRY 4.0

TTP-2610MT

Can be used as a totalizer for automatic systems or table labeling machine

Main features

- Print mode: thermal transfer and direct.
- Resolution: 203 dpi.
- Print speed: 305 mm (12")/second.
- Print width: 168 mm.
- Print length: 14,732 mm.
- Internal diameter: 76,2 mm.
- Outer diameter: 208,3 mm.
- 450 m length ribbon capacity internal and external ink.
- Ribbon width: 50,8 mm ~ 178 mm.

Software

I/O Section

- RS-232.
- Centronics.
- USB 2.0.
- Internal Ethernet, 10/100 Mbps.
- USB host, for scanner or PC keyboard.
- GPIO (factory option).
- Slot-in 802.11 a/b/g/n wireless (dealer option).
- Bluetooth (user option).

Options

- GPIO interface.
- Peel-off kit (include internal rewind & peel off module).
- Heavy duty cutter (full cut).
- 802.11 a/b/g/n wireless module (slot-in).
- Bluetooth module (serial interface).
- KP-200 Plus keyboard display unit.
- KU-007 Plus programmable smart keyboard.

Layout

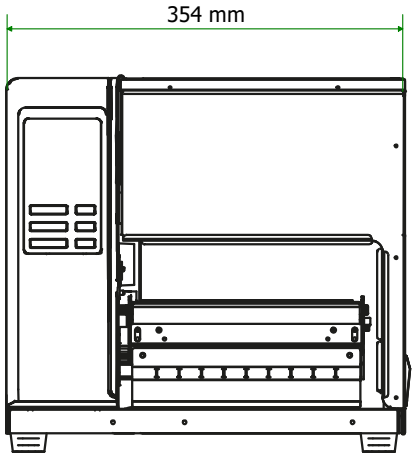

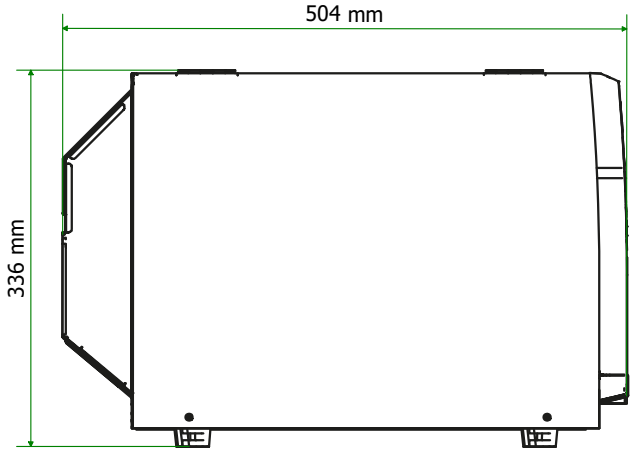

Technical specifications and images may be subject to improvements and modifications without notice.

TTP-2610MT

MODULAR AND INTEGRABLE

REDUCED MAINTENANCE COSTS

SELF-DIAGNOSTIC

CONNECTIVITY AND DATA SHARING WITH OTHER SOFTWARE

REMOTE ASSISTANCE

RS Bilance®
TECHNOLOGY for Your Business
R.S. Bilance S.r.l.
Via Rinaudo, 19, Valcorrente - 95032 Belpasso CT
Tel. +39 095 3523283
commerciale@rsbilance.com
www.rsbilance.com